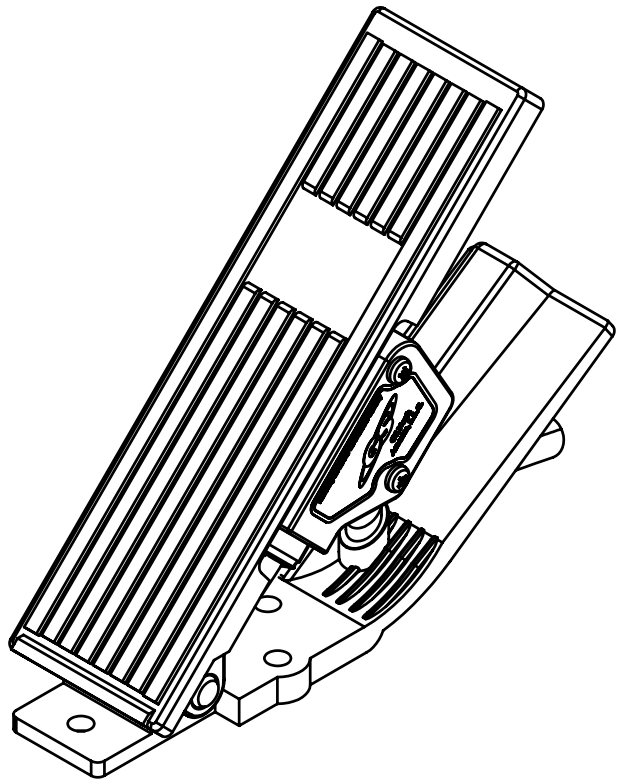

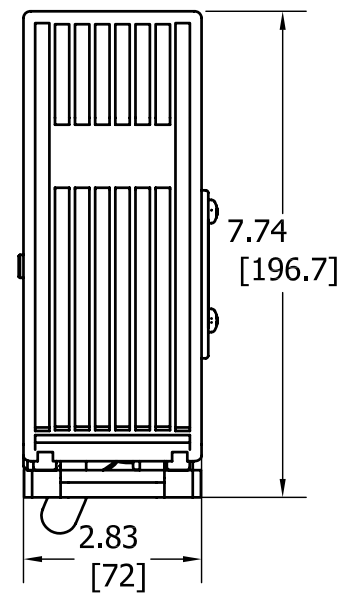

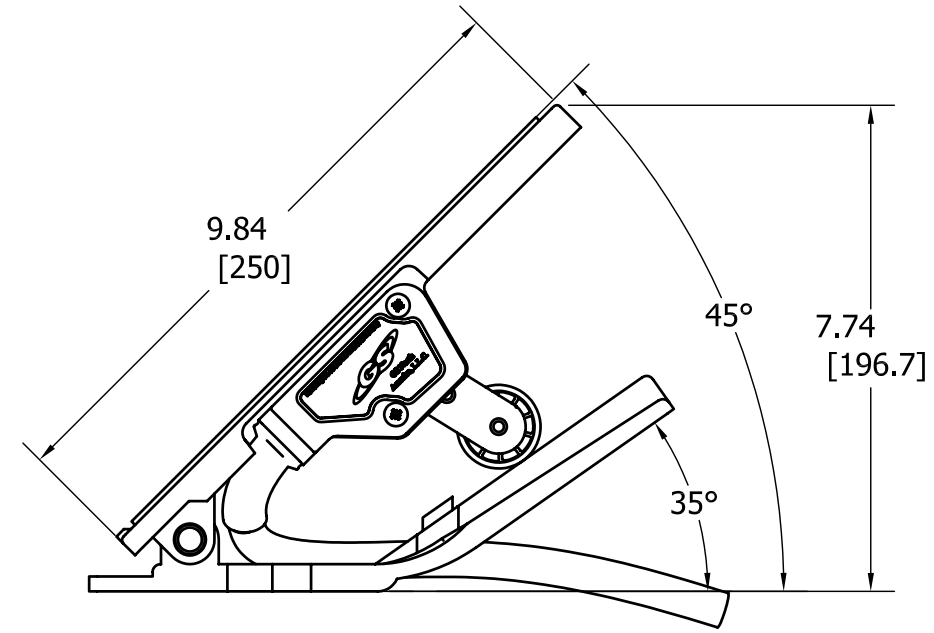

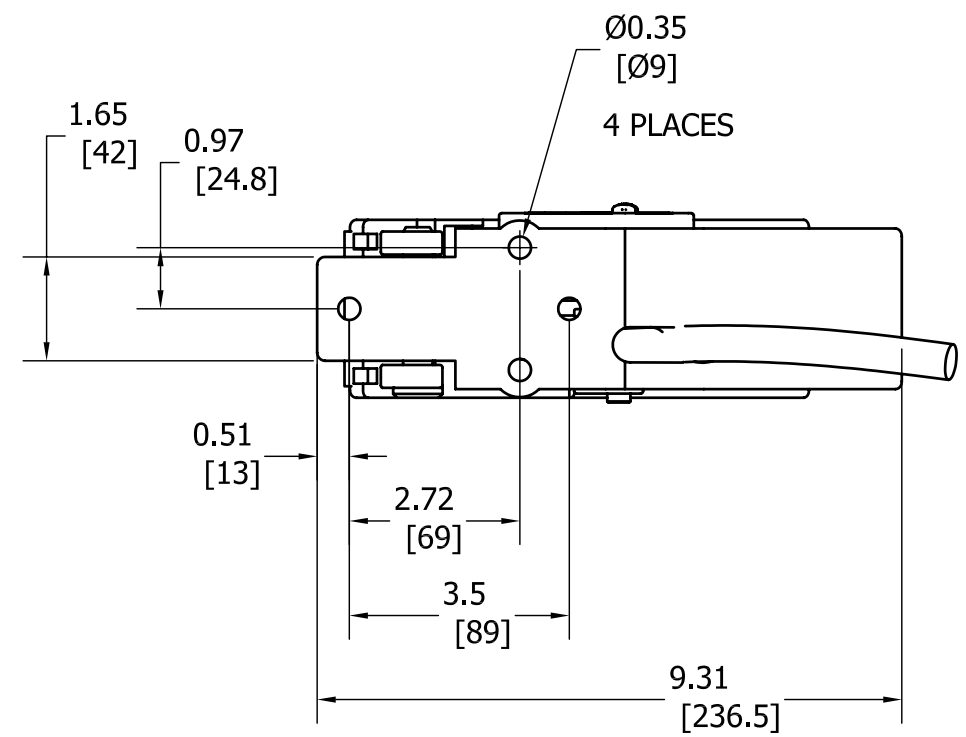

SIGNAL OUTPUTS

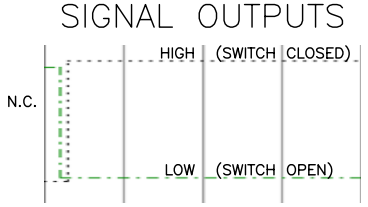

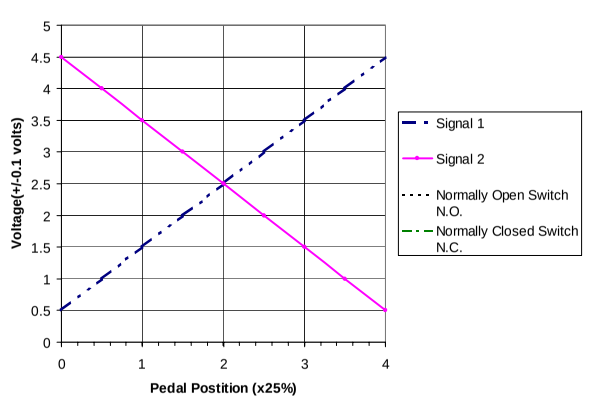

CONNECTOR 1

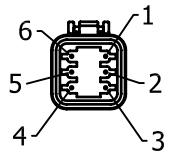

CONNECTOR 2

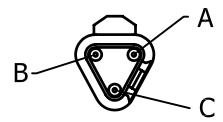

Connector 1		
Pin Location	Description	Color
1	Power Input1, 5 VDC	Red
2	Pedal Signal1 (0.5 to 4.5VDC)	Green
3	Ground1	Black
4	Switch Signal	Yellow
5	Switch, NO (5VDC 15mA Max)	Blue
6	Switch, NC (5VDC 15mA Max)	Pink

Connector 2		
Pin Location	Description	Color
A	Power Input2, 5 VDC	White
B	Pedal Signal2 (4.5 to 0.5VDC)	Orange
C	Ground2	Brown

Connector 1 Mating Connector:
Deutsch DT06-6S Connector
Deutsch W6S Wedge Lock
Deutsch 0462-201-16141 Socket Terminal
Deutsch 114017 Cavity Plug
Connector 2 Mating Connector:
Deutsch DT06-3S Connector
Deutsch W3S Wedge Lock
Deutsch 0462-201-16141 Socket Terminal

EXAMPLE WIRING OF FOOT PEDAL SWITCH:

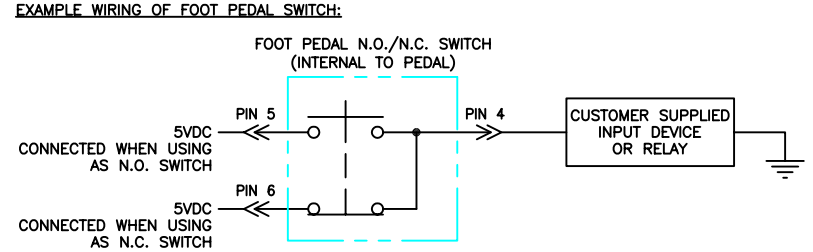

DRAWING CREATED	11/01/07	C.W.		A
DESCRIPTION	DATE	BY	ECO NO.	REV
REVISIONS				

THIRD ANGLE PROJECTION

UNLESS OTHERWISE SPECIFIED
DIMENSIONS ARE IN INCHES
ANGULAR DIMENSIONS ± 1°
FRACTIONS ± 1/64
SURFACE ROUGHNESS 125√
TOLERANCES ON DECIMALS:

	1 PLACE	2 PLACE	3 PLACE
mm	± .8	± .25	± ___
INCH	± .1	± .01	± .005

REMOVE BURRS
BREAK EDGES 0.25mm 0.01In MAX.

DRAWING BY	CWestbrook	10/25/2007
DESIGNED BY	CWestbrook	10/25/2007
RELEASED BY		
MATERIAL		
COATING/PLATING		
FORM NO.	ENG.DW.002.REVA	3/7/2006

ALL TECHNICAL DATA DISCLOSED HEREIN IS THE PROPERTY OF GS HYDRAULICS, INC. AND SHALL NOT BE USED BY OTHERS FOR MANUFACTURE, PROCUREMENT, OR DISCLOSURE WITHOUT THE WRITTEN PERMISSION OF THE OWNER.

GS NORTH AMERICA, INC.
NEW BERLIN, WI 53151

TITLE
GS NORTH AMERICA
F9 ACCELARATOR PEDAL
F9-314-270

SIZE	DRAWING NO.	REV
B	GS07428-001	A

SCALE 1:3 SHEET 1 OF 1